NOTE: LEAVE ALL NUTS AND BOLTS FINGER TIGHT UNTIL NOTED OTHERWISE.

1. Match all of the braces together by length (74 1/2").

2. Now place 2 matching braces flat together, line up the holes in the middle, and put (1) 1/2" x 1 1/4" hex bolt through the holes. A lock washer and nut will secure the bolt onto the brace. You will end up with (2) sets 74 1/2" braces.

3. Place a 2"x 4" mud sill on the bottom of each frame with the overhang at the rear of the bleacher as shown in **figure 1**. Be sure the countersunk side of the hole is facing away from the frame. Use 3/8"x 2 1/4" carriage bolt, lock washer and nut. The bolt should come up from the bottom of the sill. ***THESE CAN BE TIGHTENED NOW!***

4. Stand 2 of the frames approximately 6' apart and place a set of the 74 1/2" braces on one end between the frames at the 2nd upright on the frame as shown in **figure 1**. Place on left side of the frame castor wheels use 1/2" flat washers, lock washers and nuts..Place (2EA) 1/2" x 1 3/4" hex bolts, lock washers & nuts through the small brace and frame holes where they meet on the right side of the rame.

5.As shown in the spaces of the bleacher place a tube brace on the 1st row uprights. Attach them with two ½" x 1-¼" hex bolts, lock washers, and nuts on each end of the braces.Place 1/2" x 1-1/2" hex bolts through the tube brace and frame holes where they meet.

6 . Place another frame on the right side of the set already in place (as you face the back of the bleacher). Place a set of the 74 1/2" braces on the 2nd row upright. (You will need to remove the 2 nuts & lock washers from the two braces already in place where they meet on the frame). Use (2) 1/2" x 1 3/4" hex bolts, lock washers, & nuts to attach the braces to the new middle frame.

7. Set the last frame up to the right of the assembly already in place. Place castor wheel on the right end of the bleacher use 1/2" flat washer, lock washer and nut to secure 74 1/2" braces to frame.

TIGHTEN ALL RAIL UPRIGHT BOLTS ON THE ASSEMBLY AT THIS POINT.

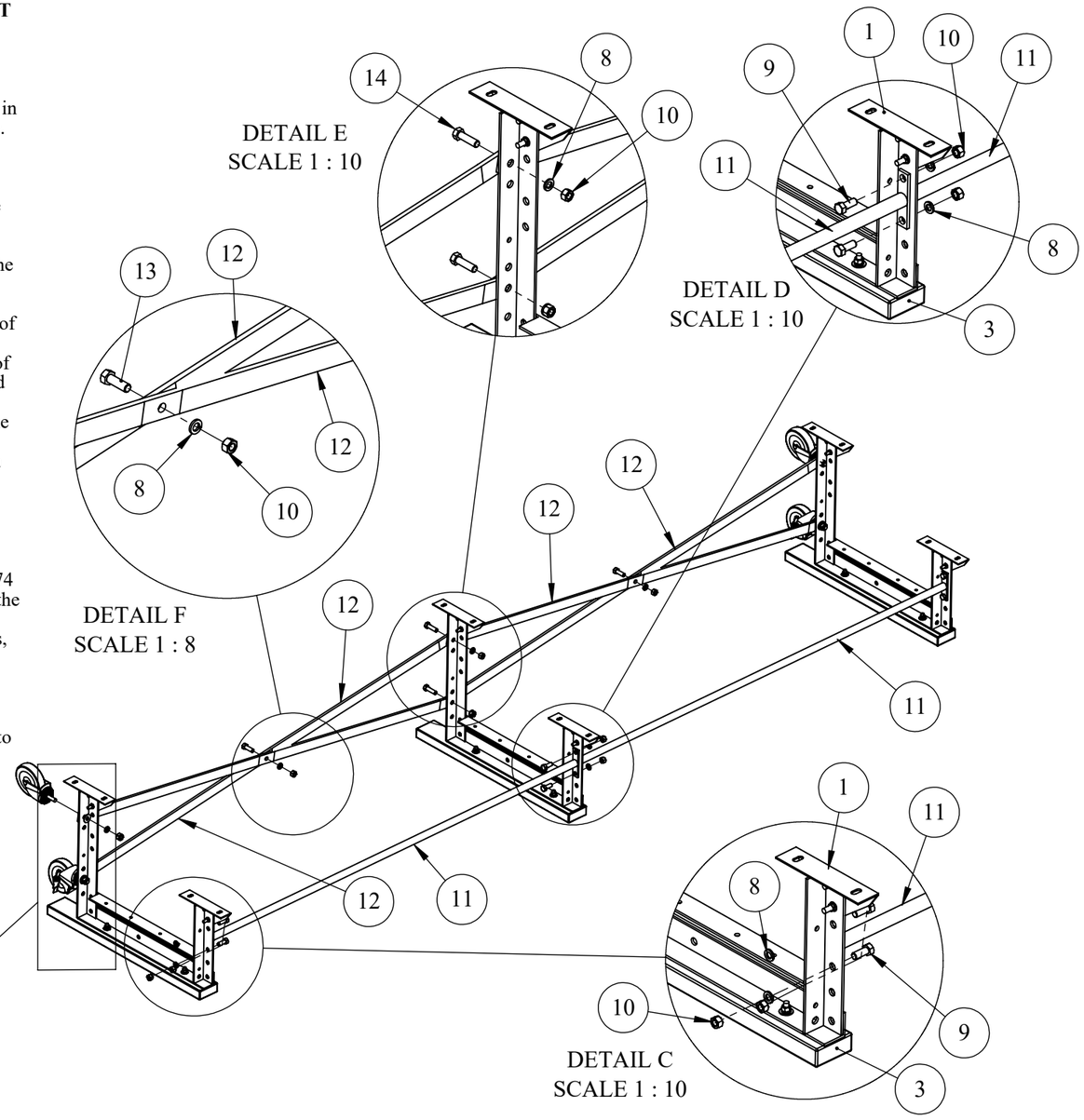

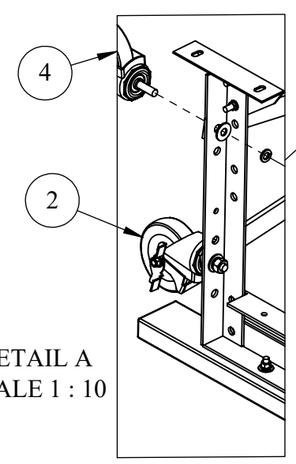

ITEM NO.	PART NUMBER	DESCRIPTION	Frame Only/QTY.
1	BLA2TR-SA1	2 ROW ALUMINUM SEAT FRAME	3
2	CASTORB	CASTER FOR BLEACHERS W/BRAKE	2
3	IBL2TR-355	2"x4" RP MUDSILL 2 ROW T&R	3
4	CASTOR	CASTER FOR BLEACHERS W/O BRAKE	2
6	Regular FW 0.375	3/8" REGULAR FLAT WASHER	6
7	HNUT 0.3750-16-D-N	3/8"-16 HEX NUT	6
8	Regular LW 0.5	REG LOCKWASHE R 1/2"	10
9	HBOLT 0.5000-13x1.25x1.25-N	HEX BOLT 1/2"-13x 1 1/4"	8
10	HNUT 0.5000-13-D-N	1/2"-13 HEX LOCKNUT	10
11	IBLA-SA2	1ST ROW GALV BRACE ASSY	2
12	IBLA-7425	X BRACE 74 1/4"	4
13	HBOLT 0.5000-13x1.5x1.25-N	HEX BOLT 1/2"-13x 1 1/2"	2
14	HBOLT 0.5000-13x1.75x1.25-N	HEX BOLT 1/2"-13x 1 3/4"	2
15	Regular LW 0.375	LOCK WASHER 3/8"	6

GENERAL NOTES:

UNLESS OTHERWISE SPECIFIED:		NAME	DATE
DIMENSIONS ARE IN INCHES TOLERANCES: FRACTIONAL ± 1/32 BEND ± 1/2° THREE PLACE DECIMAL ± .005	DRAWN	DAT	3/11/2015
	CHECKED		
	ENG APPR.		
Do Not Scale Drawing	MFG APPR.		
MATERIAL	Last Saved	4/15/2019 07:43:58	
	COMMENTS:		
SHEET 1 OF 2			

TITLE:

DESC. 2 Row Aluminum 15' Tip and Roll

S:\CADDRWGS\Solidworks\Bleachers\BLA\BLA Assemblies\Bleachers (17in)\

SIZE B | PART NO. BLA2A15TR | REV

Path to Part or Assy - BLA2A15TR

S:\CADDRWGS\Solidworks\Bleachers\BLA\BLA Assemblies\Bleachers (17in)\

Frame Only